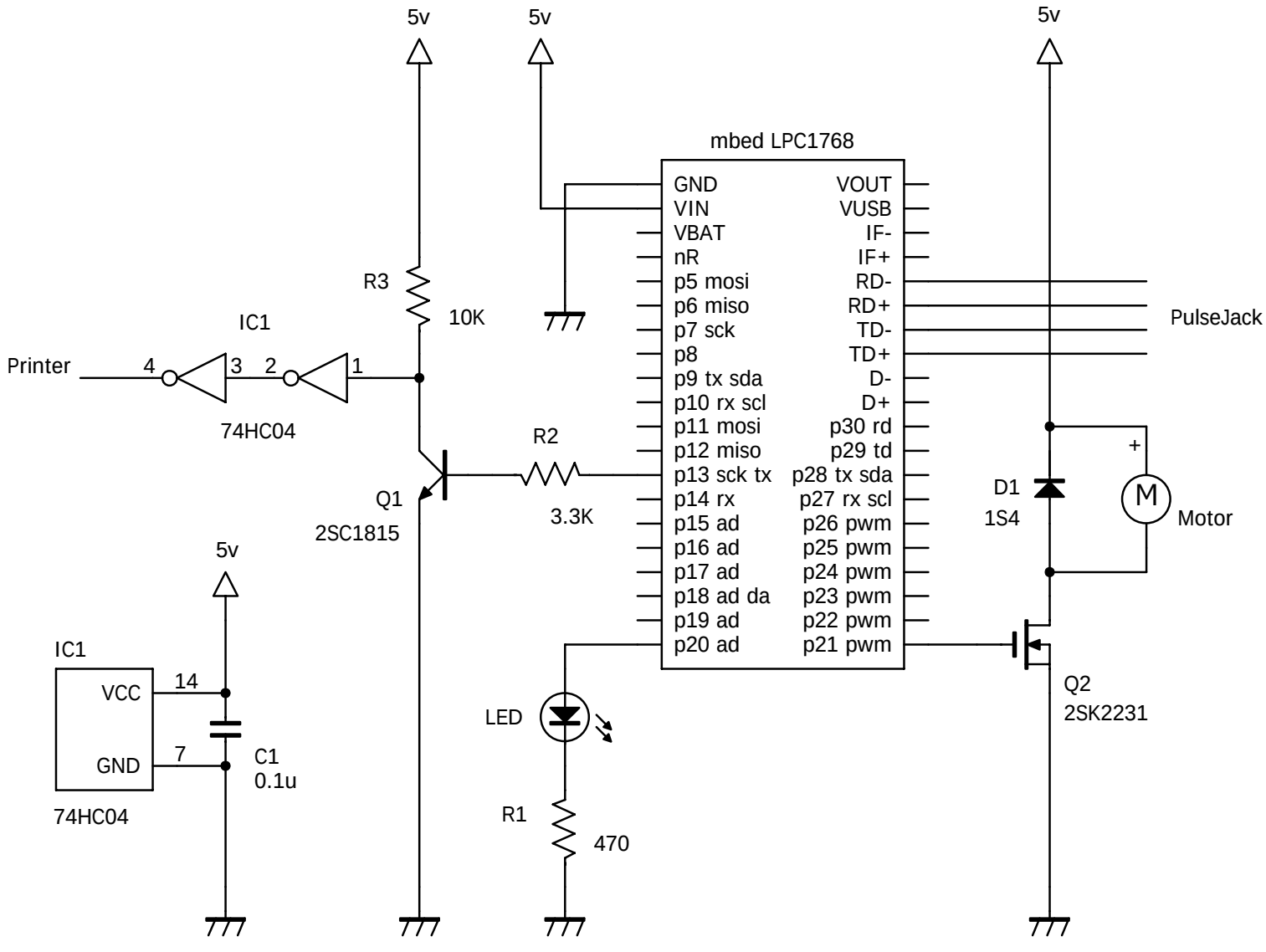
5v
5v
5v
mbed LPC1768
GND
VIN
VBAT
nR
p5 mosi
p6 miso
p7 sck
p8
p9 tx sda
p10 rx scl
p11 mosi
p12 miso
p13 sck tx
p14 rx
p15 ad
p16 ad
p17 ad
p18 ad da
p19 ad
p20 ad
VOUT
VUSB
IF-
IF+
RD-
RD+
TD-
TD+
D-
D+
p30 rd
p29 td
p28 tx sda
p27 rx scl
p26 pwm
p25 pwm
p24 pwm
p23 pwm
p22 pwm
p21 pwm
PulseJack
R3
10K
IC1
Printer
4
3
2
1
74HC04
R2
3.3K
Q1
2SC1815
D1
1S4
+
M
Motor
Q2
2SK2231
5v
IC1
VCC
GND
14
7
C1
0.1u
74HC04
LED
R1
470